NESCHEN

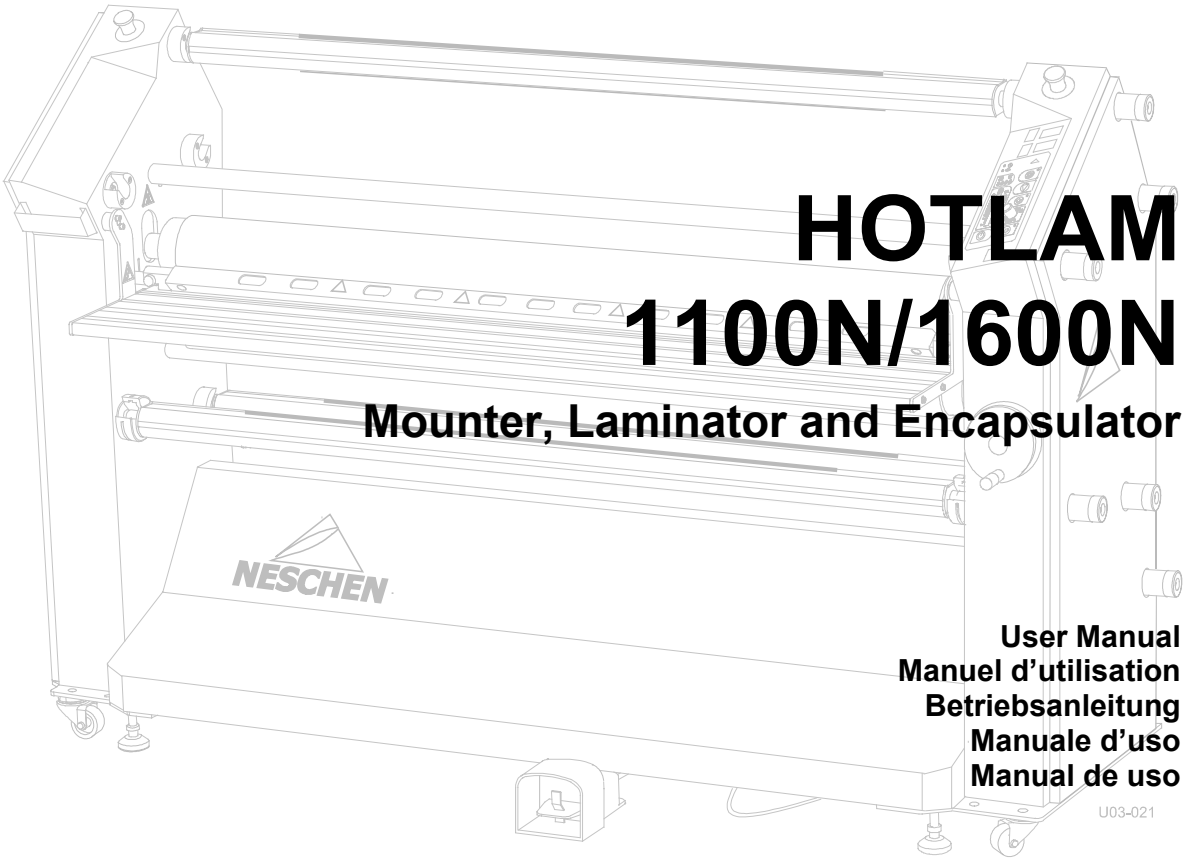

HOTLAM 1100N/1600N

Mounter, Laminator and Encapsulator

User Manual
Manuel d'utilisation
Betriebsanleitung
Manuale d'uso
Manual de uso

U03-021

977-0068

© 2003,2005, Neschen, the Netherlands.
All information included in this manual as well as information included in supplements or addendum to this manual is subject to copyright law. This information shall not be used, copied, reproduced, transmitted or disclosed to third parties without our prior written consent.

© 2003,2005, Neschen, Pays-Bas.
Toutes les informations contenues dans ce manuel ainsi que celles des suppléments ou ajouts à ce manuel sont soumis aux lois sur le copyright. Ces informations ne doivent pas être utilisées, copiées, reproduites, transmises ou divulguées à des tiers dans notre autorisation préalable par écrit.

© 2003,2005, Neschen, Niederlande.
Alle Informationen in diesem Handbuch sowie Informationen in Ergänzungen oder Zusätzen zu diesem Handbuch unterliegen dem Urheberrechtsgesetz. Die Informationen dürfen ohne unsere Genehmigung nicht verwendet, kopiert, wiedergegeben, übertragen oder an Dritte weitergegeben werden.

© 2003,2005, Neschen, Países Bajos.
Toda la información incluida en este manual y en los suplementos a anexos de este manual están sujetas a las leyes de derechos de autor. Queda prohibida la utilización, copia, reproducción, transmisión o divulgación de esta información a terceros sin nuestro consentimiento previo por escrito.

© 2003,2005, Neschen, Paesi Bassi.
Tutte le informazioni di questo manuale, nonché quelle dei supplementi o integrazioni a questo manuale sono soggette ai diritti d'autore (copyright) Queste informazioni non possono essere usate, copiate, riprodotte, trasmesse o comunicate a terze parti senza il nostro previo consenso scritto.

Neschen AG
Windmühlenstr. 6
31675 Bückeburg
Tel.: 0049 5722 207- 0
Fax: 0049 5722 207- 197

English
Français
Deutsch
Español
Italiano

HOTLAM 1100N/1600N

Mounter, Laminator and Encapsulator

User Manual

UM111EN, Rev.2.1
June 2005

TABLE OF CONTENTS

TABLE OF CONTENTS **2**
INTRODUCTION **3**
THIS MANUAL **3**
1 WARRANTY AND SAFETY INSTRUCTIONS **4**
1.1 Warranty **4**
1.1.1 Warranty conditions 4
1.1.2 Warranty period 4
1.2 Safety **5**
1.2.1 Safety features 5
1.2.2 Safety instructions 6
1.3 Warnings **6**
1.3.1 General ESD-warning 6
1.3.2 In this manual 6
1.3.3 On the machine 7
2 DESCRIPTION **8**
2.1 General **8**
2.2 Identification **8**
2.3 Machine description **9**
2.3.1 General 9
2.3.2 Parts recognition 9
2.4 Specifications **10**
2.4.1 Machine dimensions 10
2.4.2 Working area 10
2.4.3 Material specifications 10
2.4.4 Machine specifications 11
2.4.5 Delivered with the machine 11
2.5 Process principle **12**
3 INSTALLATION **13**
3.1 Unpacking **13**
3.2 Installation **14**
3.3 Transport **15**
4 OPERATING **16**
4.1 Process controls **16**
4.1.1 Control panel 16
4.1.2 Heater control 18
4.1.3 Additional controls 18
4.2 Operating modes **20**
4.2.1 Normal forward mode 20
4.2.2 Reverse 20
4.2.3 Slow mode 20
4.3 Placing film rolls **21**
4.3.1 Auto-grip shafts 21
4.3.2 Use of films with release liner 22
4.3.3 Loading shaft with film rolls 22
4.3.4 Presetting the tension 23
4.3.5 Pressure setting 23
4.4 Webbing **24**
4.4.1 Upper section only 24
4.4.2 Upper and lower section 24
4.5 Processes and settings **26**
4.5.1 Mounting images or decals 26
4.5.2 Pre-coating panels 27
4.5.3 Single-sided lamination 27
4.5.4 Over-lamination 27
4.5.5 Double-sided lamination 27
4.5.6 Encapsulation 28
4.5.7 Decaling 28
4.5.8 Option and process combinations 28
5 MAINTENANCE **29**
5.1 Cleaning **29**
5.1.1 Cleaning the silicone covered rollers. 29
5.2 Preventive maintenance **30**
5.2.1 Auto-grip shafts 30
5.3 Trouble shooting **30**
5.4 Technical assistance **31**
6 GLOSSARY **32**

INTRODUCTION

Thank you for purchasing your HotLam.

The ColdLam/HotLam family consists of:
- 2 cold version (ColdLam 1100N/1600N),
- 3 top heater versions (HotLam TH 1100N/1600N/2000N)
- 2 dual heater versions (HotLam 1100N/1600N)

The ColdLam and HotLam TH are described in a separate User Manual.

Maximum effort has been invested in the design of this machine to give you years of reliable service.

As you become familiar with your machine you will appreciate the high quality of its output and the excellence in engineering stated in its smartly styled design.

The machines, with all their factory installable options, described in this manual are all multi-functional machines that can perform the following processes;

- high-quality lamination,
- panel mounting of images,
- mounting and laminating in one pass,
- decaling,
- encapsulating of images.

The process results can be controlled by:

- temperature setting,
- speed setting,
- pressure setting,
- unwind tension of the film(s).

THIS MANUAL

This manual is intended for users of the HotLam machine ranges 1100N and 1600N.

Read this manual carefully before starting the machine. This manual contains important information for correct installation, operation and maintenance of the machine.

It also contains important instructions to prevent accidents, personal injury or serious damage prior to or during operation of the machine.

Familiarize yourself thoroughly with the functioning and operation of this machine and strictly observe the directions given.

If you have any questions or need further details on specific aspects related to this machine, please do not hesitate to contact us. The address and phone number is stated on the copyright page.

Chapter 1 will provide the safety and warranty information. Read this chapter carefully.

Chapter 2 provides a general description of the machine and its specifications.

Chapter 3 guides you through the installation of the machine. This chapter also provides information for moving, transport and decommissioning of the machine.

Chapter 4 guides you through the operation in various processes to develop basic knowledge of the machine.

Chapter 5 provides maintenance procedures for long time efficient and trouble free operation of the machine.

1 WARRANTY AND SAFETY INSTRUCTIONS

1.1 Warranty

The warranty period and conditions stated in this chapter are merely a summary of the general warranty conditions.

For the exact details on the warranty period and conditions for your machine, please contact your dealer.

1.1.1 Warranty conditions

The manufacturer warrants to the original end user* that the machine when proven defective in materials or workmanship, within the applicable warranty period will be repaired, or (at our option) replaced without charge.

Note:
The main rollers are subject to normal wear and tear and therefore have warranty on material defects only.

The manufacturer or its representative shall not be liable for any damage caused by the machine nor loss of productivity.

Warranty is voided when:

- Changes or modifications are made to this machine, not explicitly approved by the manufacturer.
- The machine is changed or modified by unauthorized persons.
- The machine is used under other than normal working conditions.
- The machine is used for purposes other than intended for (see page 3).

* The original end user is the person that first purchased the machine from the manufacturer or its representative.

1.1.2 Warranty period

The standard warranty period on this machine is one year from the date of purchase.

The main rollers and pull rollers have a warranty period of half a year on material defects only.

The warranty ends when:

- The periods stated above have expired.
- The machine changes possession.
- Warranty is voided by any of the conditions mentioned above.

1.2 Safety

This machine is provided with safety equipment to promote safe machine operation.

The manufacturer has done everything possible to prevent any possible danger and to inform you as accurately and comprehensively as possible of any hazards relating to the operation of the machine.

You should nevertheless proceed with caution when operating the machine.

Read the safety instructions below and familiarize yourself with the warning symbols summarized in the Warnings section.

1.2.1 Safety features

Emergency stops

The machine has 2 Emergency stops. When activated the Emergency stops switch off the power to the motor controller after the machine has come to a complete stop. The Emergency stops must be disengaged before a restart is possible.

Optical safety devices

The machine has an optical safety device at the input side of the nip at the main rollers. This device performs a check of the operation between transmitter and receiver.

When an error is detected (e.g. the signal is interrupted) the motor controller will be disabled and the motor will stop.

The stop signal from the optical device is overruled when:

- The machine is running in reverse direction,
- The slow mode has been activated and the footswitch is pressed.

Safety footswitch

The safety footswitch is used as remote control to start and stop the machine in the normal and the slow mode.



WARNING:

THE OPTICAL SAFETY DEVICE IS DISENGAGED WHEN USING THE SAFETY FOOTSWITCH IN SLOW MODE.
SO, KEEP CLEAR OF THE NIP WHEN PRESSING THE FOOTSWITCH, WHILE SLOW MODE IS ACTIVE.

The safety footswitch is protected with a safety lock to prevent accidental switching. Insert the forefoot completely to disengage this lock.

Slow mode

The slow mode is used when setting up the machine with new films or images.

In slow mode the machine is started with the footswitch and will then run at a fixed low speed so that the operator has both hands free to position and feed new film or image correctly into the machine.

1.2.2 Safety instructions

Work safely!

The owner of the machine is responsible for safe operation of the machine. He therefore is obliged to familiarize operating personnel with the contents of this manual and make them aware of all possible hazards.

Allow ample free space around the machine to work safely (see section 3.2).

The operator is recommended to wear safety shoes, to avoid injury by accidently falling material rolls or shafts.

Service activities on this machine must be carried out by qualified personnel.

Do not change, remove or disable the safety facilities!

1.3 Warnings

1.3.1 General ESD-warning



WARNING:

DANGER OF ELECTRIC SHOCK BY ELECTRO-STATIC DISCHARGE. PROCESSING FILMS THROUGH LAMINATING ROLLERS WILL CAUSE BUILD-UP OF ELECTROSTATIC CHARGES.

An anti-static floor coating and wearing anti-static clothing and footwear can reduce the risk of ESD-shock.

1.3.2 In this manual

In this manual you will find 3 levels of warnings.



WARNING:

THE WARNING MESSAGE IS USED WHEN A LIFE-THREATENING SITUATION MAY ARISE OR PERSONAL INJURY CAN OCCUR. FOLLOW THE INSTRUCTIONS CLOSELY.



CAUTION:
The caution message is used when there is danger of damage to the machine or materials. Follow the instructions to prevent damage.

Note:
This message is used to give you useful information for easier operation, to prevent waste of material, etc..

1.3.3 On the machine

On the machine you will find the following warning symbols (See Figure 1).



HOT OBJECTS (1)

DANGER OF GETTING BURN WOUNDS. MAKE SURE NOT TO TOUCH THE MAIN ROLLERS WHEN HEATED.

This symbol is placed on the inside side panel on both sides of the machine, just above and below the main rollers, visible from the front and rear side. And it is placed on the image guide at the front and on the tie-bar located behind the roller.



ROTATING PARTS (2)

DANGER OF GETTING INJURED BY ROTATING PARTS. MAKE SURE THAT THESE ROTATING PARTS DO NOT CATCH YOUR FINGERS, CLOTHING, HAIR, ETC.

This symbol is placed, on the front side on both arms of the in-feed table and on the rear side on the inside side panels just above and below the output table.



ESD SHOCK (3)

DANGER OF GETTING AN ELECTRIC SHOCK CAUSED BY ELECTROSTATIC CHARGE BUILD-UP IN THIS AREA.

This ESD symbol is placed in those places most likely to build-up electrostatic charges.

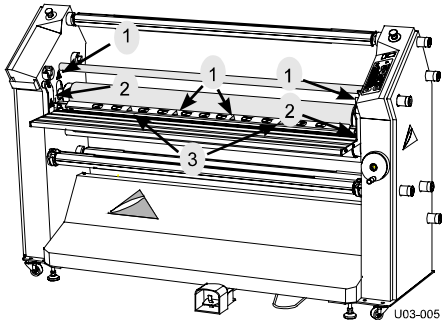

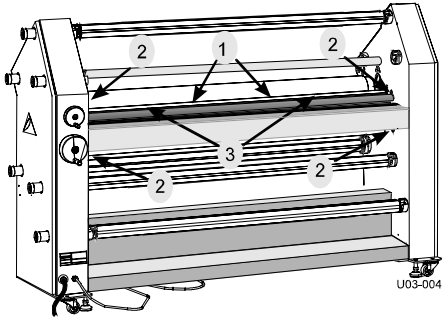

Figure 1: Warning symbol positions.

2 DESCRIPTION

This chapter describes the machine and it's operating basics.

2.1 General

The machines described in this manual are available in 2 width-versions. These differences will only show up in the section 'Specifications'. They are of no influence on the rest of the manual.

A number of items on this machine are optional.

Table 1 gives you an overview of the possible options. Any combination of the options can be added on the standard machine.

In this manual the maximum configuration is described. Where processes need an option installed, this is indicated.

	Description
Standard machine	Unwind and wind-up shaft installed in upper and lower section. Heater in top and bottom roller. Pull roller set with cooling fans. Additional bottom wind-up shaft
Optional top supply	Additional unwind shaft in the top of the upper section.
Optional Media unwind	Additional unwind facility mounted under the input table.

Table 1 Option overview.

2.2 Identification

The machine identification label is located at the bottom of the right-hand cabinet, on the rear side of the machine.

This label indicates the model, typenumber (width-version) and the power supply requirements.

CAUTION:
The mains supply must match the values indicated on the machine identification label.

An example is shown below.

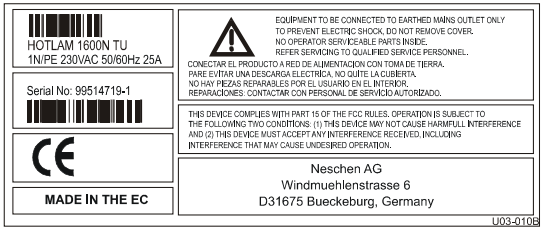

Figure 2: Machine identification label.

The machine model is called HotLam when heaters are installed in the upper and in the lower main roller.

When the typenumber is preceded by TH, only the Top Heater is installed. When the model is called ColdLam no heaters are installed.

The models ColdLam and HotLam TH are described in a separate manual.

2.3 Machine description

2.3.1 General

The machine is designed for laminating pressure and heat sensitive materials. Two silicone-coated rollers generate this pressure while feeding through the images and films.

In the upper and lower main roller a heater is installed that enables the machine to process heat sensitive films.

The machine can be divided in an upper and a lower section. The upper section consists of 2 auto-grip shafts and a splitting bar (idler). One shaft is for unwinding film, the other for re-winding the release liner. Optional an additional top unwind shaft can be installed.

The lower section is the mirror image of the upper section. The 2 auto-grip shafts in the lower section unwind the bottom film and rewind the bottom release liner. The shaft at the bottom rear side of the machine is a wind-up for the lamination result.

The area where the upper and lower main roller meet is called the “nip”. The upper main roller can be moved up or down, so the nip can be varied to feed materials of various thicknesses.

The lower main roller is motor driven. The speed can be manually set between zero and a given maximum value.

The temperature of the roller-surface is controlled by the heater controls installed just above the control panel.

In addition to the main rollers a pull roller set is provided to prevent warping of the encapsulation results. (This set is not suited for cold lamination processes.)

The cooling device (19) will prevent the pull rollers from warming up too much and therefore prevents the encapsulation result from warping.

2.3.2 Parts recognition

In this machine the following parts can be recognized:

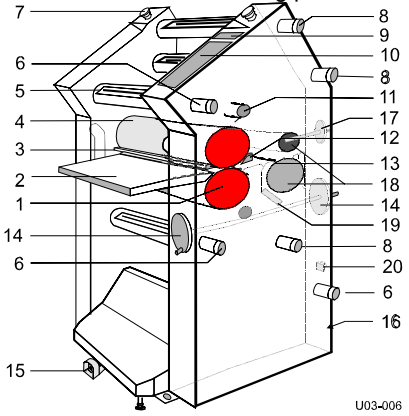

Figure 3: Main parts identification.

1	Lower main roller	12	Output nip safety bar (finger protection)
2	In-feed table	13	Output table with cutting groove or support table
3	Image guide/ Input nip safety bar	14	Nip setting and pressure control wheel
4	Upper main roller	15	Foot switch
5	Auto-grip shaft	16	Identification label
6	Wind-up tension control	17	Pull roller nip setting wheel
7	Emergency button	18	Pull roller set
8	Unwind tension control	19	Pull roller cooling device
9	Heater control	20	Mains switch
10	Control panel		
11	Splitting bar		

2.4 Specifications

The models described in this manual are called HotLam.

The HotLam is a member of the ColdLam/HotLam machine range.

The ColdLam and HotLam TH models are described in a separate manual.

2.4.1 Machine dimensions

Uncrated:

Width	1100N	175.5	cm
	1600N	223	cm
Height		142	cm
Depth	(excl. in-feed table)	77.2	cm
	(incl. in-feed table)	97.2	cm
Working height		90	cm
Weight	1100N	415	kg
	1600N	610	kg

Crated

Width	1100N	181.5	cm
	1600N	228	cm
Height		162	cm
Depth		90	cm
Weight	1100N	445	kg
	1600N	660	kg

2.4.2 Working area

Width	1100N	300	cm
	1600N	350	cm
Depth	190 cm + 2x maximum board length		

Note:
Anti-static clothing and footwear of the operator and an anti-static floor coating will help to reduce the build-up of electrostatic charges (ESD).
A relative humidity of at least 70% also helps reducing ESD-build-up.

2.4.3 Material specifications

Maximum width			
Process up to 50°C	1100N	1110	mm
	1600N	1575	mm
Process up to 125°C	1100N	1059	mm
	1600N	1524	mm
Maximum roll diameter			
Material unwind		200	mm
Release liner wind-up		150	mm
Maximum panel thickness		38	mm
Roll core inside diameter		76.2	mm

2.4.4 Machine specifications

Power supply:

HotLam 1100N/1600N;

Europe 1100N	3N/PE 230VAC +/- 10%, 50/60Hz, 14A
Europe 1600N	3N/PE 230VAC +/- 10%, 50/60Hz, 16A

For the correct supply voltage version refer to the identification label on the machine.

Standard number of rolls		
Material unwind	2 (auto-grip)	
Release liner wind-up	2 (auto-grip)	
Result wind-up	1 (auto-grip)	
Optional number of rolls		
Material unwind	1 (auto-grip)	
Media unwind	1 (table mount)	
Nip setting	0 –40	mm
Pressure	1 – 2.5	N/mm
Process speed		
Maximum	6	m/min
Slow mode	0.6	m/min
Jog mode (10 sec per 5 min)	0.3	m/min
Maximum roller temperature	130	°C
Noise level	<70	dB(A)

2.4.5 Delivered with the machine

2 Ramps (to roll off the machine from the transport pallet).
1 Scrap core.
1 Release board.
1 User manual.

2.5 Process principle

In all processes images and materials are fed through the nip from the front side to be joined together by pressure and/or temperature. They can be fed in via the in-feed table, or can be rolled off from a roll.

The example in Figure 4 shows maximum use of facilities.

When an image (4 or 5) has to be coated on both sides, the top coating film (6) is taken from a supply roll on the upper unwind shaft (10). The image itself is fed in via the in-feed table by hand (5) or from the optional media unwind (4). The bottom coating film (3) is taken from a supply roll on the lower unwind shaft (15).

Some pressure sensitive laminates have a release liner (2/7) that has to be removed. This laminate runs over a splitting bar (14/11) where the release liner is peeled off. The release liners are rolled up onto scrap cores placed on the wind-up shafts (1/8).

The bottom coating can also be an adhesive backing, like you will find on stickers (decals, see Figure 5).

The main rollers can be heated. The heat sensitive film is fed under the splitting bar providing maximum contact surface with the heated main rollers.

When encapsulating (dual sided hot lamination), an additional set of pull rollers (12) is used to stretch the result to avoid warping. The bottom pull roller will absorb the heat from the encapsulation result and warm up slowly. The cooling unit (13) will prevent this.

The bottom shaft (16) is used to wind-up the continuous result.

The optional top unwind roll (9) can be used to put two laminate supply rolls (for the top layer) on the machine at the same time for faster changing.

Note:
The optional top unwind roll (9) and the upper unwind roll (10) cannot be used at the same time in a process.

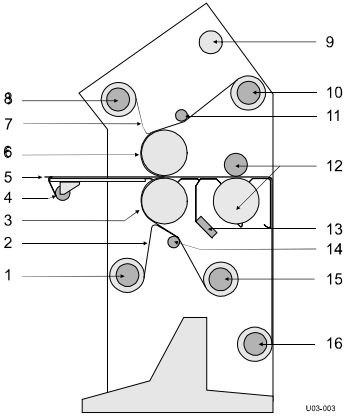

Figure 4: Pressure sensitive encapsulating process.

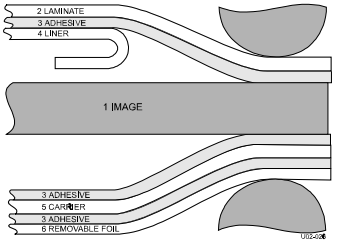

Figure 5: Cross section of layers, when making a decal.

3 INSTALLATION

WARNING:

INSTALLATION MUST BE CARRIED OUT BY SKILLED PERSONNEL.

Note:
Make sure that the machine, in its final position, has adequate space. You will need room to feed, receive and trim images.

3.1 Unpacking

At delivery, the machine is packed in a plastic bag to avoid moisture penetration. It is transported in a carton box and is fastened onto a wooden pallet.

Note:
To unpack the machine at least 2 persons are needed.

The machine is equipped with castors that allow easy movement.

Place the pallet in a space where there is enough room to roll off the machine from the pallet (approx. 3x the length).

To unpack, follow the steps below (refer to Figure 6);

1. Cut the straps and lift off the carton box.
2. Remove the plastic bag.
3. Remove the four securing bolts (1).
4. Turn down the four leveling feet (2) to lift the machine.
5. Remove the wooden blocks (3).

WARNING:

ROLL OFF THE MACHINE ON THE SHORT SIDE OF THE PALLET. ON THE LONG SIDE IT WILL BECOME TOP-HEAVY AND FALL OVER.

6. Place the two ramps (4) to the pallet so that the castors (5) will run clear from the edge.

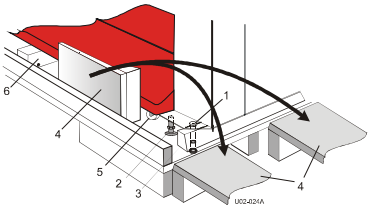

Figure 6: Removing transport parts.

7. Unscrew and remove the support block (6) 90° to make room for the machine to pass by.
8. Turn up the four leveling feet (2) to put the machine on its castors (5).
9. Roll off the machine from the pallet using the ramps and put the machine in its final place.

WARNING:

DANGER OF GETTING CAUGHT UNDER THE MACHINE WHEN MOVING IT ON ITS CASTORS. ROLL OFF THE MACHINE BY 2 PERSONS. IT IS HEAVY AND CAN NOT BE CONTROLLED ALONE.

Note:
Save all packing material for later moving over large distance or discard of according to local regulations.

3.2 Installation

1. Move the machine to its final place.

Note:
Allow ample working space. See Figure 7.

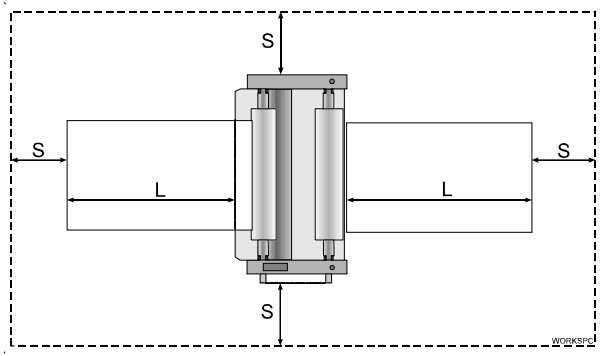

Figure 7: Working space.

L = Maximum board length

S = Minimum space 60 cm

2. Turn down the four leveling feet until the castors are free from the floor.

3. Level the machine by adjusting the four leveling feet. Put the spirit level on the upper main roller.

4. Remove all transport material.

- Cut the straps holding the in-feed table arms and lower the in-feed table
- Cut the straps and move up the top main roller to remove the wooden blocks and the transport foam from the nip.
- Cut the straps around the shaft suspensions and remove the transport foam.

CAUTION:
Check the mains values before connecting.
See section 2.4.4 for power supply details.

5. Connect the machine to the mains using the power cable supplied with the machine.

CAUTION:
Only if absolutely necessary, use an extension cable of ample capacity. Unroll the extension cable completely.

WARNING:
MAKE SURE THE POWER SUPPLY CABLE AND/OR THE EXTENSION CABLE IS NOT BLOCKING YOUR WAY AROUND THE MACHINE.

This machine has a high power consumption and is therefore supplied with a direct mains input and a mains switch (Figure 8).

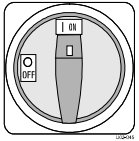

Figure 8: Mains switch.

6. Turn the Mains switch to ON, to set the machine in stand-by mode.

WARNING:

WHEN THE MAINS SWITCH IS SET TO ON, PART OF THE MACHINE IS CONSTANTLY POWERED.

3.3 Transport

The machine can be transported on a smooth surface on its castors.

CAUTION:
Turn up the leveling feet completely to prevent them to bend or break when accidentally bumping into an obstacle.

On rough surfaces use a pallet truck or forklift.

When moving the machine over large distances, use original pallet and packing material and follow the unpacking procedure in the opposite way.

4 OPERATING

This chapter describes the function of the controls and indicators, the operating modes, how to set up and operate the machine and a number of applications.

4.1 Process controls

This section gives an overview of the controls on the control panel (Figure 9), the heater control (Figure 10) and elsewhere on the machine (Figure 12).

Note:
Switch on the heaters approximately 1 hour before use, if a process requires the rollers to be heated. Close the nip and let the machine run at low speed, to avoid irregular warming up.

4.1.1 Control panel

This paragraph describes the controls and indicators on the control panel.

When LED's are blinking, this indicates an error.

Control ON/OFF (1), toggle pushbutton;
Press 1 second to switch the machine from stand by to active and back.

WARNING:

WHEN THE MAINS SWITCH IS SET TO ON, PART OF THE MACHINE IS CONSTANTLY POWERED.

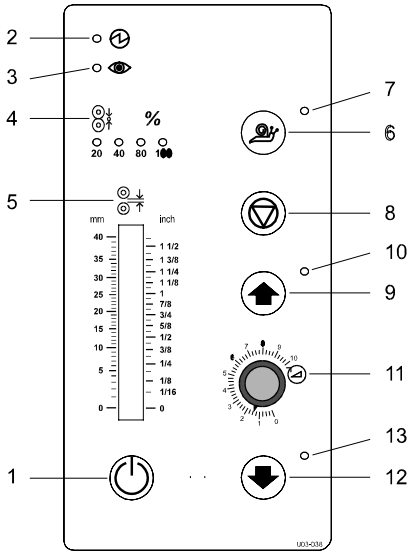

Figure 9: Control panel

Power indicator (2), LED;
The LED will light when the machine is powered. It flashes when the machine is in stand-by mode.

Safety indicator (3), LED;
The LED will light when the beam of the optical safety device at the input side of the nip is not interrupted.

Pressure indication (4), 4 LED's;
The LED's indicate the pressure setting of the main rollers. When 2 LED's light at the same time, they indicate the tens in between. See specifications for actual pressure range.

All four LED's flashing

This indicates a pressure or nip setting error. The LED's start flashing at 10% overload. When the pressure exceeds a 20% overload an audible signal is generated. Increase the nip to lower the pressure.

NIP setting indication (5), Pointer;
This mechanism is directly coupled with the nip control and indicates the distance (nip) between the main rollers, set by the hand wheel.

Slow mode (6), toggle pushbutton;
Press 1 second to switch slow mode ON or OFF.
To run at the fixed slow mode speed the footswitch must be pressed.

CAUTION:
When slow mode is active the machine can still run at high speed.
Slow mode indication is NOT a speed indication. It is a working method.

Slow mode indicator (7), LED
The LED will light when slow mode is selected.

Stop (8), pushbutton;
Press to stop the rotation of the rolls.

Forward (9), pushbutton;
Press to start the rotation of the rolls in the forward direction.

Forward indicator (10), LED;
The LED will light when the forward mode is selected.

Speed control (11), control knob;
Sets the speed anywhere in a range between 0 and 10 (See specifications for actual speed range).

Reverse (12), pushbutton;
Press to start the rotation of the rolls in reverse direction.

Reverse indicator (13), LED;
The LED will light when the rollers are rotating in the reverse direction.

Forward and Reverse indicator flashing

This indicates a motor overload. Press the stop button and check the material flow and the tension setting of the unwind shafts. If the error persists, contact your service organisation.

4.1.2 Heater control

Above the control panel the heater controls are installed.

These sections control the temperature of the corresponding main roller

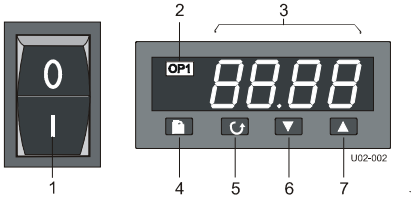

Figure 10: Heater control.

The heaters are enabled by the ON/OFF switch (1) and turned on and off by the temperature control.

When the machine is turned ON, the actual temperature (3) and the operation mode OP1 (2) will be displayed on the temperature control.

The heater has a factory defined temperature range. Within this range the roller temperature can be regulated.

The temperature setting is displayed when the up (7) or down (6) button is pressed. To change the temperature setting press the up (7) or down (6) buttons.

The buttons (4) and (5) are not used.

Note:
The heated roller needs time to reach its final temperature (e.g. from room temperature to maximum takes approximately 1 hour). It is recommended to let the machine run at low speed, to avoid irregular warming up.

Cooling device (optional)

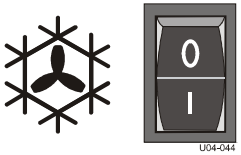

The optional cooling device is switched ON and OFF by the 0/I switch below the control panel.

Figure 11: Cooling device switch.

4.1.3 Additional controls

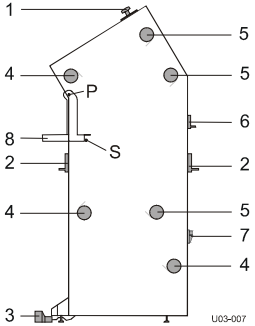

Figure 12: Additional controls

Emergency stop buttons (1), push and hold button;

When pressed the rotation of the rolls is stopped immediately and the button is locked into this stop position.

Turn the button to unlock it.

Pressing start, reverse or footswitch starts the process again.

Nip setting wheel (2), geared wheel;

Turning the wheel will set the nip or change the pressure in the nip. The front and the rear nip setting wheel are on the same axis.

To set the nip with the front wheel; turn the wheel clockwise to close the nip or counter-clockwise to open the nip.

The rear wheel opens the nip when turned clockwise and closes the nip when turned counter-clockwise

When both rollers touch the materials, the pressure is set. By turning the front wheel clockwise the pressure is increased. Turning the front wheel counter-clockwise will decrease the pressure. The rear wheel decreases the pressure when turned clockwise and increases the pressure when turned counter-clockwise

The nip setting and the pressure are indicated on the control panel.

Foot switch (3), snap switch;

Press and hold the switch to start the rotation of the rolls. Insert the forefoot completely to disable the safety lock that prevents accidental starting.

When the switch is released, the rotation of the rolls will stop.

Wind-up tension control (4), knob;

By turning this knob clockwise an amount of friction is set between the shaft and the driving sprocket wheel, so this will act as a coupling between motor and wind-up shaft. Tightening the coupling will apply more tension to the material on the shaft.

To release the tension, turn the knob counter-clockwise.

Unwind tension control (5), knob;

By turning this knob clockwise an amount of friction is set between the shaft and the frame, so this will act as a brake. Tightening the brake will apply more tension to the material on the shaft.

To release the tension, turn the knob counter-clockwise.

Pull roller lifting wheel (6), geared wheel;

Hand wheel to lift the upper pull roller.

Turning the wheel clockwise will lift the upper pull roller.

Turning counter-clockwise will lower the upper roller until it rests on the bottom pull roller

Mains switch (7), 2-position switch;

To switch the mains supply to the machine ON or OFF.

Switching ON the machine will put it in standby mode.

In-feed table (8);

The in-feed table can swing up around pivot point (P) till it is upside down. In the upper position it is stopped by the shaft supports and in the lower position by the table stops (S).



WARNING:

DANGER OF GETTING CAUGHT BETWEEN TABLE AND CABINET OR MAIN ROLLER. HOLD THE TABLE IN THE MIDDLE AND SWING IT UP OR LOWER IT COMPLETELY.

4.2 Operating modes

The machine is either in normal mode, slow mode. In both normal and slow mode the rollers can rotate in forward or in reverse direction.

4.2.1 Normal forward mode

Normal forward mode can be activated from standstill when slow mode is not active.

The rotation speed of the rollers in normal mode is set via the speed control knob.

Rotation is started when the start button is pressed and stopped when the stop button is pressed.

When the footswitch is pressed, control is taken over by the footswitch and the rollers will rotate forward until the footswitch is released.

To return control to the control panel without stopping, press and hold the start button, release the footswitch and then release the start button.

An interruption of the light beam of the optical safety device will stop the rotation of the rollers.

The process can be continued by the start button after the interruption is taken away.

4.2.2 Reverse

Rotation in the reverse direction can only be started from stand still by pressing the reverse button.

CAUTION:
The unwind shafts will not rewind the material, they are not motor driven.

Rotation is stopped when the stop button is pressed.

WARNING:
KEEP CLEAR OF THE REAR SIDE NIP WHEN RUNNING IN REVERSE MODE.

When running in reverse, the optical safety device (at the front side nip) is disabled.

The speed is determined by the speed control, also when slow mode is selected.

4.2.3 Slow mode

Slow mode is entered and left by pressing the slow mode button for 1 second. Selection is indicated by the slow mode indication LED.

When selecting slow mode from normal forward mode, the speed (normal speed) will not change until the footswitch is pressed.

Normal speed

Normal speed in slow mode is still determined by the speed control setting.

Switching between normal speed and standstill is done by the start and the stop button.

Slow mode speed

Slow mode speed is a fixed low speed (see specifications) independent from the speed control. Slow mode speed is only selected when the footswitch is pressed and held.



WARNING:

KEEP CLEAR OF THE NIP WHEN RUNNING IN SLOW FORWARD MODE.

When running at slow mode speed, the optical safety device is disabled.

When the footswitch is released, the forward rotation is stopped.

To change from slow mode speed to normal speed without stopping, press and hold the start button, release the footswitch and then release the start button.

Note:
Changing to normal speed will not deactivate slow mode.

Pressing the footswitch again will slow down rotation to slow mode speed again.

The combination of slow mode speed and reverse is not possible.

4.3 Placing film rolls



WARNING:

DANGER OF FINGER OR TOE INJURY WHEN DROPPING A ROLL. FINGER OR TOE CAN GET PINCHED BY THE MATERIAL ROLL AGAINST TIEFRAME OR FLOOR.

When a shaft is not correctly inserted in its suspension, it can fall out during loading, webbing or running.

4.3.1 Auto-grip shafts

All shafts are equal. Their function is determined by its position in the machine.

The shafts fit into the machine in both ways. (Shafts from old ColdLam versions with a ball type of pressure piece in the shaft do not fit in these machines.)

On the control panel side of the machine the shaft and the suspension snap together by a gripper slot and gripper.

At the left-hand side of the machine a thrust piece in the suspension pushes the shaft into locking position when the shaft is turned.

To position the shaft correctly push it firmly into the suspensions and turn the shaft until it locks in.

Check the auto-grip mechanism on each shaft. The rubber cords should just touch the edges of the recess (Figure 13A: d = 8 ± 2.5 mm).

If not, see chapter 5 Maintenance.

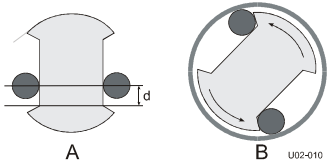

Figure 13: Auto-grip shaft

When the shaft is rotated inside a cylinder, the rubber cord will move to the side and gets caught between shaft and cylinder (Figure 13B). Rotating back will release the cord.

4.3.2 Use of films with release liner

When in a process film is used with release liner that must be removed, the wind-up shaft must be loaded with a scrap core (empty cardboard cylinder) having the same width as the film.

1. Take the auto-grip shaft from the wind-up position of the machine.
2. Place the scrap core on the shaft.

CAUTION:
Do not drop the end of the shaft on the floor.

3. Put the shaft with cylinder back into the machine.
4. Push both sides of the shaft firmly into its suspension.
5. Turn the shaft until the gripper locks in.

4.3.3 Loading shaft with film rolls

The auto-grip shafts are symmetrical. When inserting it back into the machine, take care that the film unwinds the correct way.

1. Take the auto-grip shaft from the unwind position of the machine.
2. Insert the shaft into the core cylinder of the film roll. In Figure 14 the shaft is seen from the gripper side.

Note:
In general release liner is on the outside of the film on the roll. Whereas heat sensitive film (or pressure sensitive film without release liner) has its adhesive on the inside of the roll.

3. Insert the shaft with film roll in the correct way into the machine.

   Unwind direction of film in the upper section:
   - film with release liner towards 1
   - film without release liner towards 2

   Unwind direction of film in the lower section:
   - film with release liner towards 2
   - film without release liner towards 1

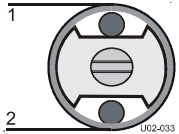

Figure 14: Auto-grip shaft position.

4. Push both sides of the shaft firmly into the suspensions.
5. Turn the shaft until the gripper locks in.
6. Position the film and the empty core in the middle.

Note:
When both upper and lower section is used, place both films at exactly the same position.

7. Make sure the film is set up the right way.

4.3.4 Presetting the tension

When the film is webbed, it is recommended to set a mild tension to each shaft by turning the knob clockwise until you feel some resistance.

On the unwind shaft this will prevent film to unwind too fast and cause wrinkles in the result.

On the motor-driven wind-up shaft it allows the shaft to slip and adapt its rotation speed to the speed of the film.

For example: Too much tension on a release liner wind-up will pull the film forward and level down the unwind tension of the film. This will cause wrinkles in the result.

4.3.5 Pressure setting

CAUTION:
Remove the pressure and open the nip, to avoid flattening of the rollers when standing still for a longer period.

Thin images

When processing thin images (thickness less than the film) pressure is preset when the upper and lower material is webbed.

During processing the pressure can be adjusted. The best pressure setting for thin films is about 80%.

Panels

When processing panels, a leader panel is used to preset the pressure.

Use a leader panel of the same material, thickness and width as the panels to process.

1. Set the nip to the thickness of the panel.
2. Feed the panel in the nip in slow mode.
3. Set the pressure to approximately 80% for full-width panels.

CAUTION:
For narrower panels set the pressure proportional to the width between 40% and 80%. E.g. half width equals 60%.

4. Push the reverse button to run the panel back through the machine.

4.4 Webbing

Film with release liner always runs via a splitter bar (or idler) to separate the release liner from the film.

To get more contact surface with the heated main roller heat sensitive film also runs via this idler (splitter bar).

A leader panel is always needed to insert the films into the nip. When panels are processed, it must be of the same thickness as the panels to process to set correct nip-pressure.

WARNING

DANGER OF GETTING BURN WOUNDS. MAKE SURE NOT TO TOUCH THE MAIN ROLLERS WHEN HEATED.

4.4.1 Upper section only

1. Remove the image guide.
2. Unwind the film from the upper or top unwind roll.
   - Lead pressure sensitive film (without release liner) from the top unwind roll over the splitting bar (A).
   - Lead all other films underneath the splitting bar (B).
3. Pull the film forward until approximately 10 cm is on the in-feed table.

   In case of release liner:
   - Peal off the release liner.
   - Pull the release liner from the rear side over the wind-up shaft.
   - Stick it to the scrap core on the wind-up shaft.
4. Stick a leader panel to the film.
5. Feed the panel into the nip using slow mode.
6. Refit the image guide.

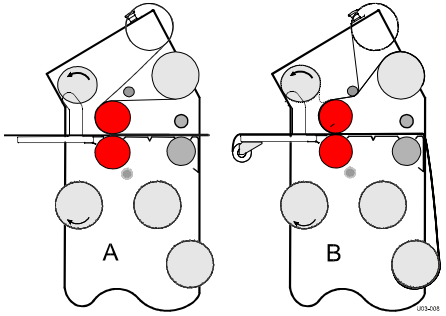

Figure 15: Webbing upper section.

During processing:
- Check and adjust the tension on the unwind- and wind-up shafts.
- Check and adjust the pressure setting while feeding through the leader board or images.
- Now speed can be set to normal.

4.4.2 Upper and lower section

The film in the upper section is webbed first;

1. Lead the film underneath the splitting bar (between splitter bar and upper roller)
   - Pressure sensitive film (without release liner) from the top unwind shaft has to go over the splitting bar.
2. Pull the film forward till it almost reaches the in-feed table and apply it to the upper roller

   In case of release liner:
   - Peel off the release liner
   - Pull it from the back over the wind-up shaft
   - Stick it onto the cylinder on the wind-up shaft.

Now web the lower section;

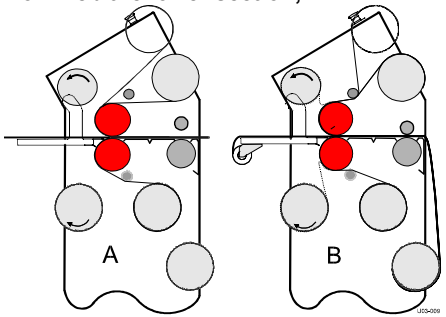

Figure 16: Webbing lower section.

3. Lift the in-feed table and put it in the top position.
4. Unwind the film from the lower unwind roll.
   - Lead pressure sensitive film without release liner underneath the splitting bar (A).
   - Lead all other films over the splitter bar (B).
5. Pull the film forward till the end reaches above the nip and stick it to the film from the upper section.

   In case of release liner:
   - Peel off the release liner.
   - Pull it underneath the wind-up shaft.
   - Stick it from below onto the cylinder on the wind-up shaft.
6. Lower the in-feed table and refit the image guide
7. Push the films with a leader panel into the nip using slow mode.

   Note:
   Use a leader panel of the same material, thickness and width as the panels to process.
8. While feeding the leader panel through the nip, set the pressure for optimum result.

When encapsulating:

Note:
When encapsulating it is recommended to use release board as leader.

9. Let the leader panel pass the pull rollers.
10. Engage the pull rollers.
11. Cut off the leader panel and set the nip to zero.
12. Set the pressure to the recommended value.
13. While feeding test images, check and adjust the pressure setting.

Roll to roll processing:

14. Lower the speed to minimum.
15. Pull the image from the media unwind over the in-feed table and push it into the nip until it is picked-up.
16. When the result is long enough stick the end to the cylinder on the bottom wind-up position

- Now speed can be set to normal.
- Check and adjust the tension on the unwind- and wind-up shafts (see also section 5.3).
- Let the release liner split off close to the nip to prevent dust from attaching to the unprotected adhesive layer as much as possible.

4.5 Processes and settings

4.5.1 Mounting images or decals

In this process the machine is not webbed with film.

- When mounting images onto a (pre-coated) board (B), the adhesive is on the mounting side of the board.
- When mounting decals (A), the adhesive is on the back of the image.

The mounting process is equal for both.

1. Remove the shafts from the upper section.
2. Preset the nip and the pressure (see section 4.3.5).
3. Put the board on the in-feed table.

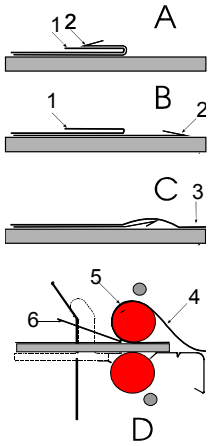

Figure 17: Mounting images or decals

4. Put the image on top of the board (image side up). Turn back the image at the machine side (1).
5. Turn back approx. 25 mm release liner (2) at the machine side and crease this evenly from the inside out.

Note:
The final quality depends on the way in which the leading edge of the image is applied to the board.

6. Apply the image to the board (3).
7. Insert the end with the image adhered to into the nip.
8. Lay the loose end of the image smoothly over the upper roller (4).

Note:
Use the footswitch to start/stop in slow mode, keeping your hands free.

9. With your left hand - peel back the release liner (6) from the image or board as it is slowly fed into the nip one section at a time, without stopping.

Note:
Removing the release liner completely exposes the adhesive to dirt and dust that will get trapped under the image.

10. With your right hand - keep the image smooth against the upper roller (5), preventing the image to wrinkle.

Note:
For the best result; do not stop while feeding of an image.

4.5.2 Pre-coating panels

This process is used to coat boards (substrates) with a pressure sensitive mounting film onto which images can be mounted. This process can also be used to create a carrier board.

Note:
Mounting film is usually provided with one release liner. Place the film and web it as if it is without release liner, over the splitter bar.

1. Place the roll of mounting film on the shaft of the upper unwind position.
2. Set the nip to correspond to the thickness of the panels to process.
3. Web the film using a leader board of the same material, thickness and width.
4. Set the pressure while feeding the leader board.
5. Before the end of the leader board enters the nip, butt up the panel to be pre-coated.

When more panels have to be pre-coated feed them in continuously without any gap.

At the end, use a leader board again to finish. This is to prevent the adhesive to touch the bottom roller.

6. Butt up and feed the ending leader board until the previous panel is out of the nip.

CAUTION:
Do not cut film close to or on the rollers. This will damage the silicone coating of the rollers and will void the warranty.

7. Cut this panel free.
8. Back-up the leader board using the reverse.
9. Cut the film using a blade cutter.

After removing the release liner from the pressure sensitive mounting adhesive, the board has an adhesive coating ready to mount an image. See section 4.5.1 for mounting images.

4.5.3 Single-sided lamination

Images are laminated single-sided using carrier (or release) boards. This laminate can be a heat sensitive laminate or a pressure sensitive adhesive with release liner.

- The image is put on the carrier board with the image up.
- All steps in this process are equal to steps when pre-coating a board (section 4.5.2).

4.5.4 Over-lamination

After an image is mounted to a panel, a protective laminate can be applied. This over-laminate can be a heat sensitive laminate or a pressure sensitive adhesive with release liner.

- All steps in this process are equal to steps when pre-coating a board (section 4.5.2).

4.5.5 Double-sided lamination

Encapsulating images with cold laminates is called double-sided lamination (and is normally not done with panels).

1. Load and web laminating film in the upper and the lower section.
2. Stick a leader board to the films and feed it together with the films through the nip.
3. When the leader board is completely out of the nip, lower the upper roller onto the lower roller (nip setting = 0).
4. Now feed the images into the nip, allowing a gap between them.

5. Cut the film with the blade cutter when the images are clearly free from the rollers.

To unload the machine:

6. Open up the nip.
7. Cut the film along the splitter bar using a blade cutter.
8. Backup and remove the film between the rollers, using the reverse.

4.5.6 Encapsulation

Encapsulation is the term for sealing an image with heat sensitive laminates on both sides.

It can only be done in one pass on the (real) HotLam because both rollers need to be heated.

- Switch ON the heater(s) at least a ½ hour before starting (1 hour for max. temperature).
- The procedure is equal to double-sided lamination.

Pull rollers

To get a better encapsulating result, use the pull rollers to stretch and cool the encapsulation result.

Result to roll

When large amounts of images are encapsulated (fed by hand or from the media unwind option), the result can be rolled up on the bottom wind-up shaft.

- When the result is long enough stick the end to the cylinder on the bottom wind-up position and set a little tension.

4.5.7 Decaling

When decaling, a laminate is put over the image side and an adhesive backing is put on the backside of the image.

So this decal can later be mounted on a panel or other substrate.

4.5.8 Option and process combinations

	ColdLam/TH Standard version		Optional lower section installed		HotLam
Heaters installed	No heaters	Upper roller	No heaters	Upper roller	Both rollers
Pre-coating (making panels self-adhesive)	Yes	Yes	Yes	Yes	Yes
Single sided / over lamination	Cold only	Yes	Cold only	Yes	Yes
Double sided lamination	In 2 passes	In 2 passes	Yes	Yes	Yes
Decaling	Cold only, in 2 passes	In 2 passes	Cold only	Yes	Yes
Encapsulation	No	In 2 passes	No	In 2 passes	Yes
Result to Roll and Roll to Roll	No	No	No	No	Yes

5 MAINTENANCE

Service activities on this machine must be carried out by qualified personnel.

5.1 Cleaning

The machine has to be cleaned regularly. Dirt and dust may influence the result of the lamination processes.

CAUTION:
Do not use abrasive materials for cleaning the machine. This can damage the painted surfaces or the silicone covering of the rollers.

Use a damp cloth for cleaning.

CAUTION:
Make sure water does not run into any of the cabinets. This can damage the electrical circuits when power is applied.

Clean the exterior of the machine with a damp cloth as needed. If necessary, use a household-cleaning solution to remove difficult marks.

Clean the shafts and the rubber cords on it as required.

5.1.1 Cleaning the silicone covered rollers.

The rollers must be cleaned regularly to prevent a build-up of adhesive residue. This may eventually damage the rollers.

Use a damp lint-free cloth to remove dust and other dirt.

Use a silicone-cleaning block to remove the adhesive stains from the rollers.

Note:
Adhesive is easier to remove when the rollers are hot.

Put a waste panel between the rollers when cleaning the upper roller, to prevent adhesive remnants from falling onto the lower roller.

WARNING:
MAKE SURE THE ROLLERS ARE COLD WHEN USING ALCOHOL FOR CLEANING. ISOPROPYL ALCOHOL IS EASY FLAMMABLE.

Difficult stains can be removed with aid of isopropyl alcohol (IPA) and a clean lint-free cloth.

Do not pour isopropyl alcohol directly on the machine.

5.2 Preventive maintenance

Our machines are designed in such way that they need little (preventive) maintenance in addition to the cleaning.

The following checks have to be performed:

- Auto-grip shafts with blocking cords.

5.2.1 Auto-grip shafts

Check the auto-grip mechanism on each shaft.

- The distance (d) between the rubber cords and the edges of the recess should be 8 ± 2.5 mm minimum (the cord must not touch the skew).

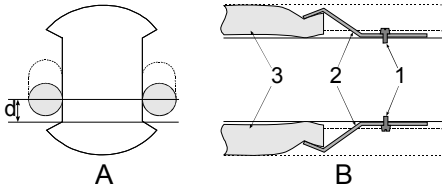

Figure 18: Auto-grip shaft

If not, correct as follows:

- Loosen the clamp (2) with the screw (1) till the cord is free on one side.
- Shorten the cord by approximately 10 mm.
- Put back the end of the cord underneath the clamp (2).
- Secure it by tightening the screw (1)

5.3 Trouble shooting

During processing wrinkles can show up in the image (1) on the in-feed table (2) and the process result (4) on the output table.

The figures below show some examples where it is caused by the main rollers (3) or the pull rollers (5), and gives a possible solution.

Wait until a few meters is processed to see results.

Pressure too high.

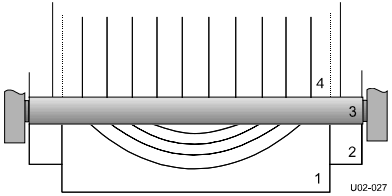

Figure 19: Wrinkles due to high pressure.

- Decrease the roller pressure a little (5-10%).

Pressure too low.

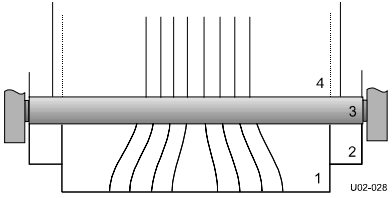

Figure 20: Wrinkles due to low pressure.

- Increase the roller pressure a little (5-10%).

Unwind tension too low.

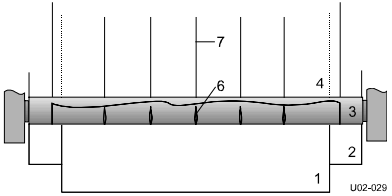

Figure 21: Wrinkles due to low unwind tension.

- Increase the unwind tension until the wrinkles (6) in the film on the roller disappear just before the film enters the nip. The lines (7) in the result will disappear as well.

Pull tension too low

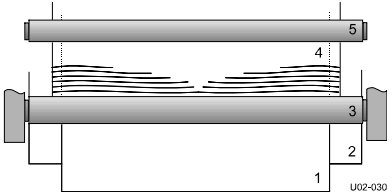

Figure 22: Wrinkles due to low pull tension.

- This is a machine adjustment error. Contact your dealer and ask for technical assistance.

Roller alignment fault.

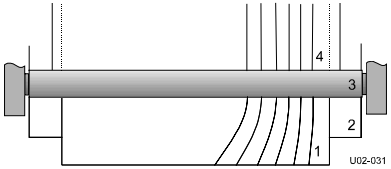

Figure 23: Wrinkles due to faulty roller alignment.

The wrinkles occur on one side only (left or right).

- Check the leveling of your machine. If this is O.K.:
- This is a machine adjustment error. Contact your dealer and ask for technical assistance.

5.4 Technical assistance

For technical assistance you can contact your dealer or the address on the copyright page in front of this manual.

Make a clear description of the problem before contacting.

Please keep the type and serial number of your machine at hand.

You can find this data on the identification plate of your machine, which can be found on the rear side of the right-hand cabinet.

6 GLOSSARY

Carrier board
A board with a non-stick surface that is used when laminating one side of an image only.

Decal
An image with an adhesive backside (Am.: Sticker)

Decaling
Providing an image with laminate on the image side and adhesive on the backside.

Encapsulating
Sandwiching an image between two heat sensitive films.

Laminate
A thin film of clear material to be permanently affixed onto an image.

Laminating
Providing an image with a thin film of clear material.

Leader board
A piece of stiff card or foam used to lead film into the nip of the main rollers. In addition this used when pre-coating to prevent adhesive getting onto the rollers.

Main rollers
A set of two silicon coated rollers that perform the actual process.

Mounting
Permanently affixing an image onto a backing board.

Mounting film
Adhesive backing to make an image self-adhesive. On the side that is in contact with the image the carrier has an adhesive with or without release liner. The carrier can function as release liner or be supplied with a second (cold) adhesive layer and release liner.

Nip
The area where the top and bottom main rollers meet is called the nip.

Pre-coating
Coating a substrate with an adhesive mounting film onto which an image can be mounted.

Pull rollers
Set of rollers used in the encapsulation process to stretch the result in order to avoid warping.

Release liner
Backing film protecting the adhesive layer of a laminate or mounting adhesive. Once the release liner is pealed off, the adhesive layer becomes exposed.

Roll
A (shaft with a) cylinder loaded with film or release liner.

Roller
One part of the main element in the machine that performs the actual process (see main rollers).

Scrap core
An empty cardboard cylinder left over when all material on a roll is used.

Stretch unit
Set of pull rollers and a cooling fan used in the encapsulation process to avoid warping of the result.

Webbing
Loading the machine with film, so that the machine is ready for processing.